| ZONE | REV | DESCRIPTION | DATE | APPROVED |
|---|---|---|---|---|
| | 00 | EC01359US – ENGINEERING RELEASE | 05/29/08 | JTC |

NOTES:

1. MAX TORQUE: 40Nm
2. MAX WORKING REACH: 635mm
3. TOOL DIAMETER: 51.82/27.94mm
4. MAX TOOL WEIGHT: 2.95kg

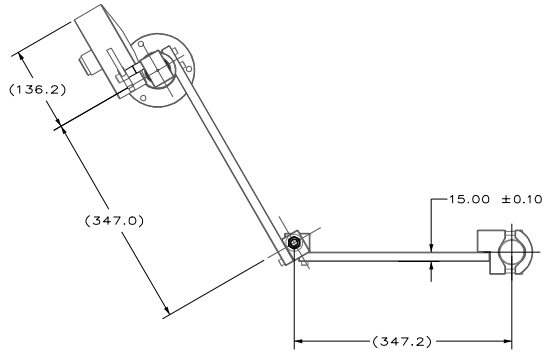


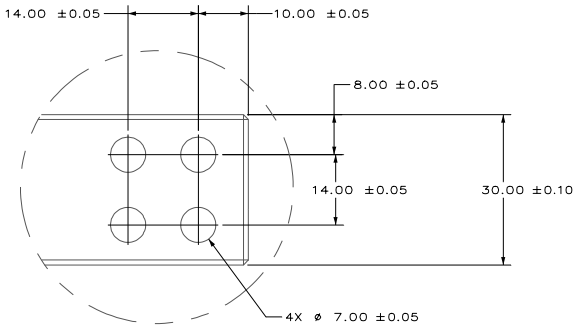


DETAIL B
SCALE 2:1
TOOL HOLDER REMOVED
FOR CLARITY

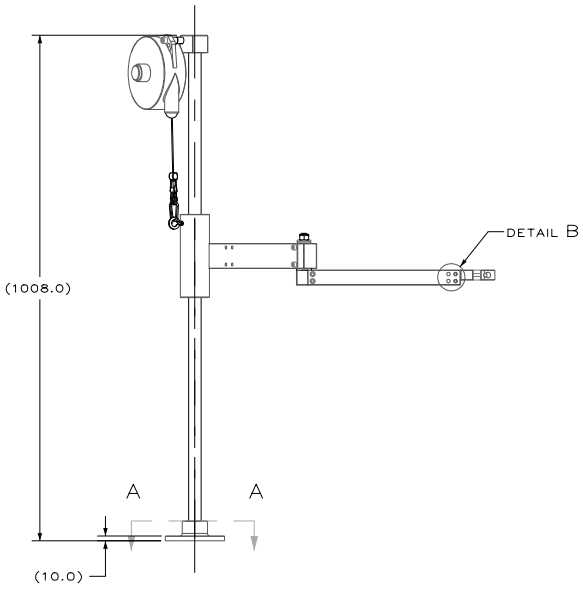


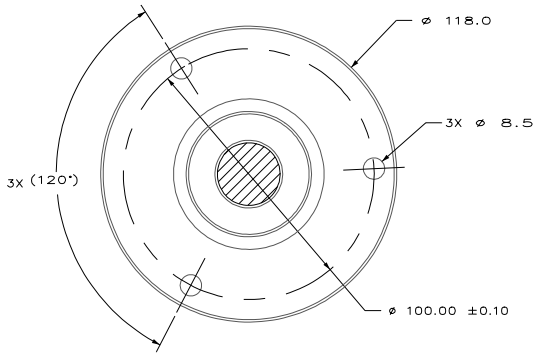


SECTION A–A

| | | | |
|---|---|---|---|
| MATERIAL | UNLESS OTHERWISE SPECIFIED DIMENSIONS ARE IN MILLIMETERS PER ASME Y14.5M–1994 TOL ON ANGLE ±0°30' REMOVE BURRS AND SHARP CORNERS MACH SURFACES 125 MAX | WARNING: EXPORT OR RE-EXPORT OF THIS DRAWING OR A PRODUCT PRODUCED BY THIS DRAWING IS SUBJECT TO U.S. EXPORT ADMINISTRATION REGULATIONS AND OTHER APPLICABLE GOVERNMENTAL RESTRICTIONS OR REGULATIONS. | SI–METRIC ▷ DENOTES REQUIRED ENGLISH DIMENSION THIRD ANGLE PROJECTION |
| HEAT TREAT | | | |
| FINISH | | | |


COPYRIGHT 2008 INGERSOLL-RAND COMPANY ALL RIGHTS RESERVED

INGERSOLL-RAND IS THE SOLE OWNER OF THIS DRAWING AND ALL INFORMATION IN IT, WHICH ARE PROTECTED BY COPYRIGHT AND OTHER LAWS AND MAY BE SUBJECT TO LAWS REGARDING EXPORTING INFORMATION OUTSIDE OF THE U.S. THIS DRAWING MAY BE USED ONLY BY ITS RECIPIENTS FOR THE PURPOSE FOR WHICH IT IS PROVIDED AND ONLY BY THE RECIPIENT, WHO AGREES THAT IT WILL NOT, WITHOUT INGERSOLL-RAND'S PRIOR WRITTEN PERMISSION: 1) DISCLOSE NOR USE THIS DRAWING OR THE INFORMATION IN IT EXCEPT AS SPECIFIED ABOVE; OR 2) MAKE ANY COPIES OF OR EXTRACTS, REVISIONS, OR UPDATES FROM THE DRAWING. ALL COPIES MUST BE RETURNED TO INGERSOLL-RAND UPON COMPLETION OF THE WORK FOR WHICH THEY HAVE BEEN PROVIDED OR UPON ANY EARLIER REQUEST.


| | | |
|---|---|---|
| DWN BY | galvarez | 03/24/08 |
| CKD BY | JTC | 3/24/08 |
| PROJECT LEADER APP | KJH | 3/24/08 |


Ingersoll-Rand PRODUCTIVITY SOLUTIONS
Ingersoll-Rand Company
1467 Route 31 South
Annandale, NJ 08801


DRAWING TITLE: TORQUE ARM ASSEMBLY, 40Nm

| PART NO. | CGN | REV |
|---|---|---|
| QTA040 | 45547502 | 00 |

SIZE A1 | SCALE NTS | SHEET 1 OF 1