ZONE	REV	DESCRIPTION	DATE	APPROVED
	00	ECO1359US - ENGINEERING RELEASE	05/29/08	JTC

NOTES:

1. MAX TORQUE: 475Nm
2. MAX WORKING REACH: 2007mm
3. MAX TOOL WEIGHT: 23.00kg

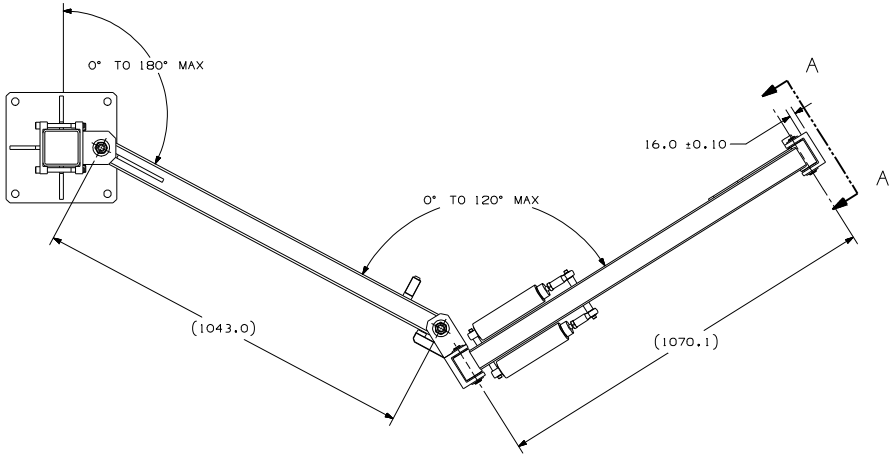

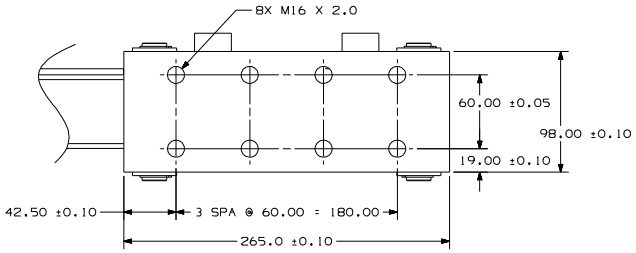

SECTION A-A
SCALE 1:2
ROTATED 32° CW
FOR CLARITY

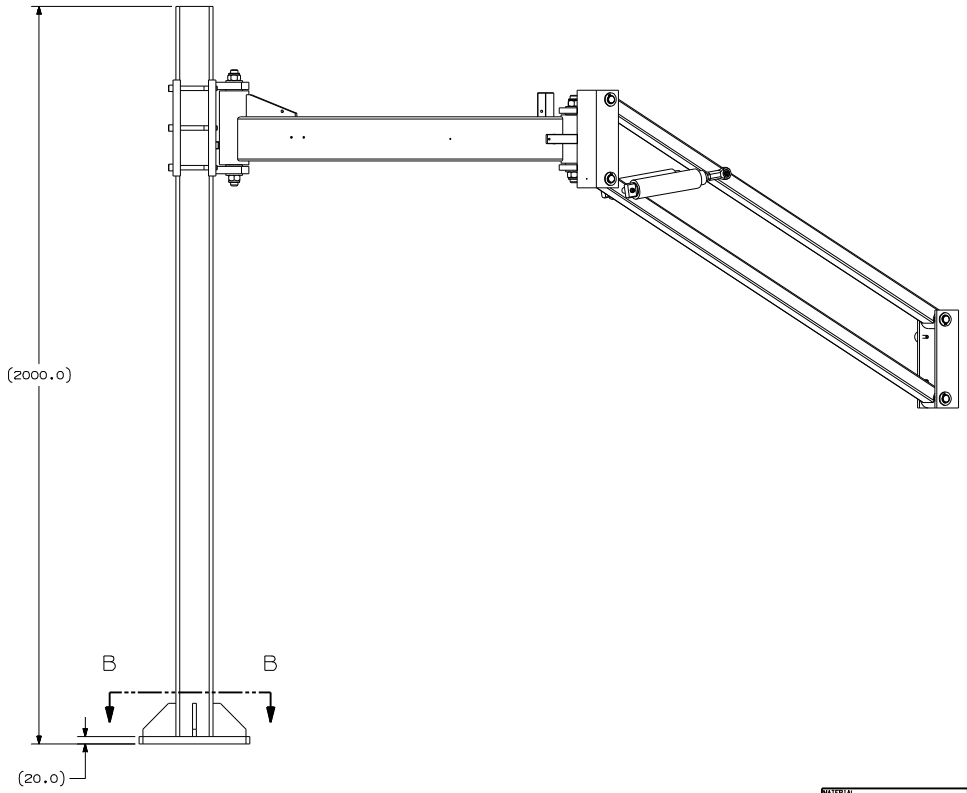

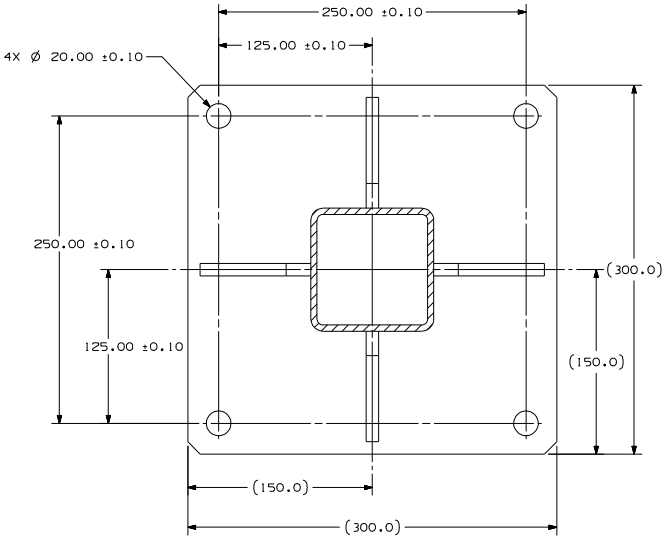

SECTION B-B
SCALE 1:2

MATERIAL	UNLESS OTHERWISE SPECIFIED DIMENSIONS ARE IN MILLIMETERS PER ASME Y14.5M-1994 TOL ON ANGLE ±1/2° REMOVE BURRS AND SHARP CORNERS MACH SURFACES 3.2 MAX	WARNING: THE EXPORT OR RE-EXPORT OF THIS DRAWING OR A PRODUCT PRODUCED BY THIS DRAWING IS SUBJECT TO U.S. EXPORT ADMINISTRATION REGULATIONS AND OTHER APPLICABLE GOVERNMENTAL RESTRICTIONS OR REGULATIONS. INGERSOLL-RAND IS THE SOLE OWNER OF THIS DRAWING AND ALL INFORMATION IN IT, WHICH ARE PROTECTED BY COPYRIGHT AND OTHER LAWS AND MAY BE SUBJECT TO LAWS REGARDING EXPORTING INFORMATION OUTSIDE OF THE U.S. THIS DRAWING MAY BE USED ONLY BY ITS RECIPIENTS FOR THE PURPOSE FOR WHICH IT IS PROVIDED AND ONLY BY THE RECIPIENT, WHO AGREES THAT IT WILL NOT, WITHOUT INGERSOLL-RAND'S PRIOR WRITTEN PERMISSION: 1) DISCLOSE NOR USE THIS DRAWING OR THE INFORMATION IN IT EXCEPT AS SPECIFIED ABOVE; OR 2) MAKE ANY COPIES OF OR EXTRACTS, REVISIONS, OR UPDATES FROM THE DRAWING. ALL COPIES MUST BE RETURNED TO INGERSOLL-RAND UPON COMPLETION OF THE WORK FOR WHICH THEY HAVE BEEN PROVIDED OR UPON ANY EARLIER REQUEST.	COPYRIGHT © 2008 INGERSOLL-RAND COMPANY ALL RIGHTS RESERVED	SI-METRIC ▷ DENOTES REQUIRED ENGLISH DIMENSION THIRD ANGLE PROJECTION DRN BY galvarez 03/27/08 CKD BY JTC 3/27/08 APPROV BY KJH 3/27/08	Ingersoll-Rand PRODUCTIVITY SOLUTIONS Ingersoll-Rand Company 1467 Route 31 South Annandale, NJ 08801 DRAWING TITLE TORQUE ARM ASSEMBLY, 475Nm PART NO. QTA475 CON 45547569 REV 00 SIZE A1 SCALE NTS SHEET 1 OF 1
HEAT TREAT				
FINISH				