TS700/TS900/TS1400 Series

Starters for Gas Turbine Engines

Features/Benefits

- No oil in drive air is necessary
- Splash lubrication system internally lubricates the planetary gears and motor bearings
- Air cooling extends bearing and seal life
- No internal or external shut-off devices

Versatile

- Multiple spline pinions
- Multiple gear ratios for matching the optimum engine characteristics
- Multiple flange options
- Gas-sealed for application flexibility

TS700/TS900/TS1400 SERIES MODEL CODING

TS 7 99 B B E E - L E

- TS — TURBINE OR RECIPROCATING ENGINE
- 7 — MODEL
- 99 — ARC: HALF – 50, FULL – 99
- B — CLUTCH TYPE
- B — GEAR RATIO
- E — FLANGE
- E — SPLINE
- L — PINION ROTATION R = RIGHT, L = LEFT
- E — E = ELBOW, M = V CLAMP

TS725/TS750GBBE-LE DIMENSIONS

Weight lbs (kg)	
TS725GBBE-LE	80 (36.3)
TS750GBBE-LE	80 (36.3)

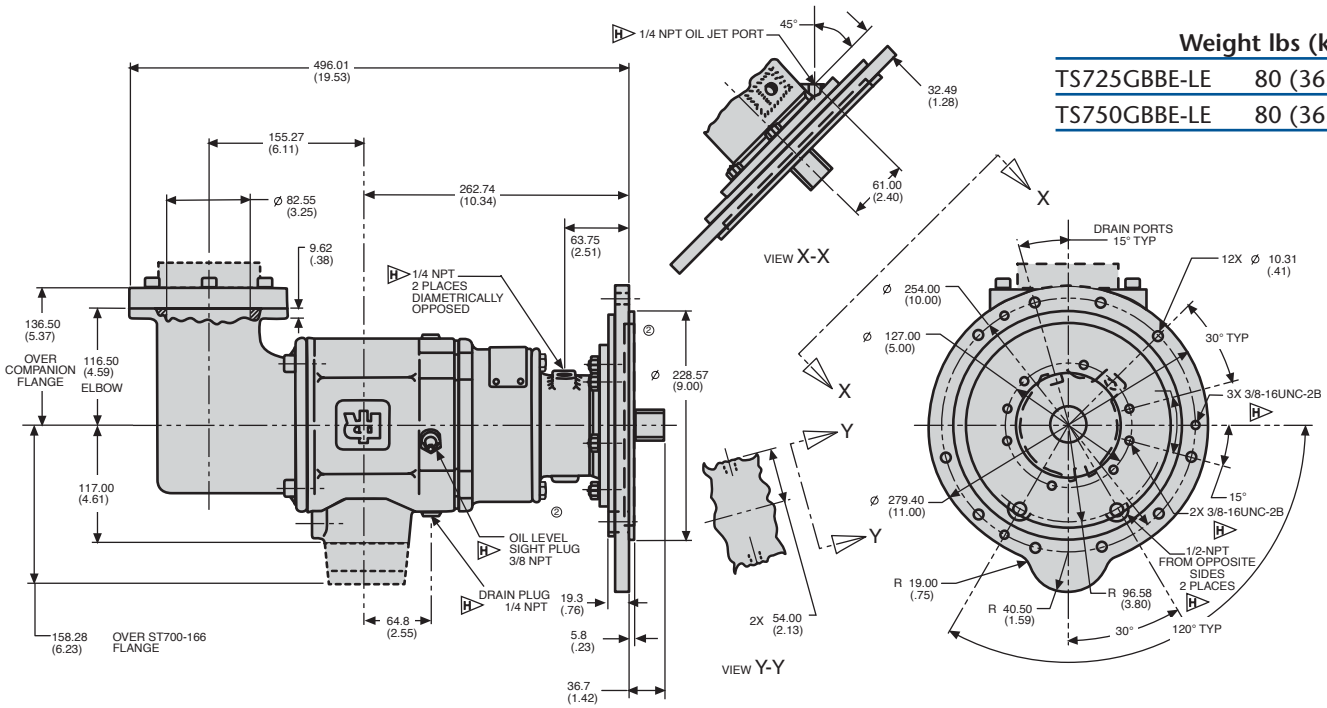

TS725GBDE-LE DIMENSIONS

Weight lbs (kg)	
TS725GBDE-LE	80 (36.3)

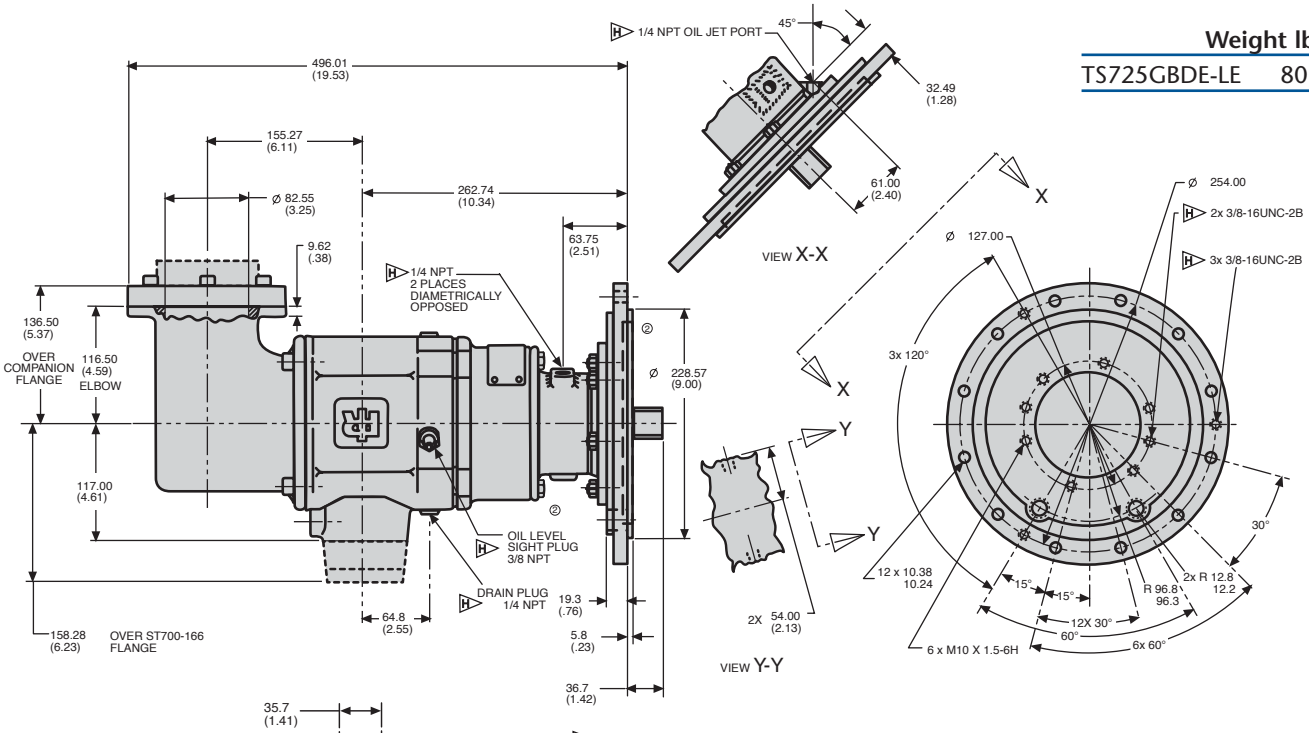

Inlet Flange Kit (ST700-K166) DIMENSIONS

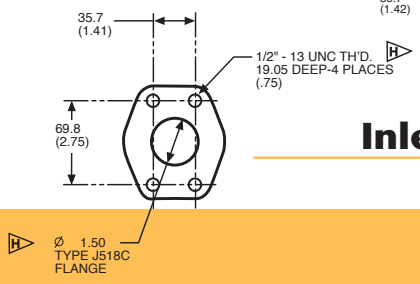

TS799BBEF-LE DIMENSIONS

	Weight lbs (kg)
TS799BBEF-LE	70 (31.8)

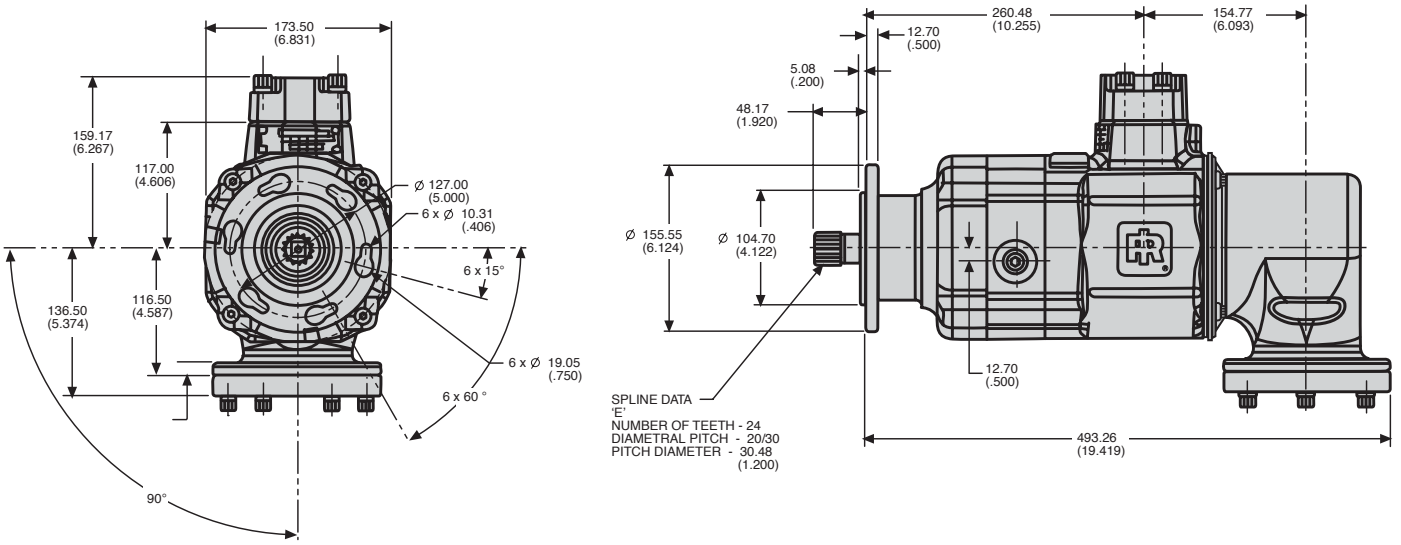

TS799BBEF-LM DIMENSIONS

	Weight lbs (kg)
TS799BBEF-LM	62 (28.1)

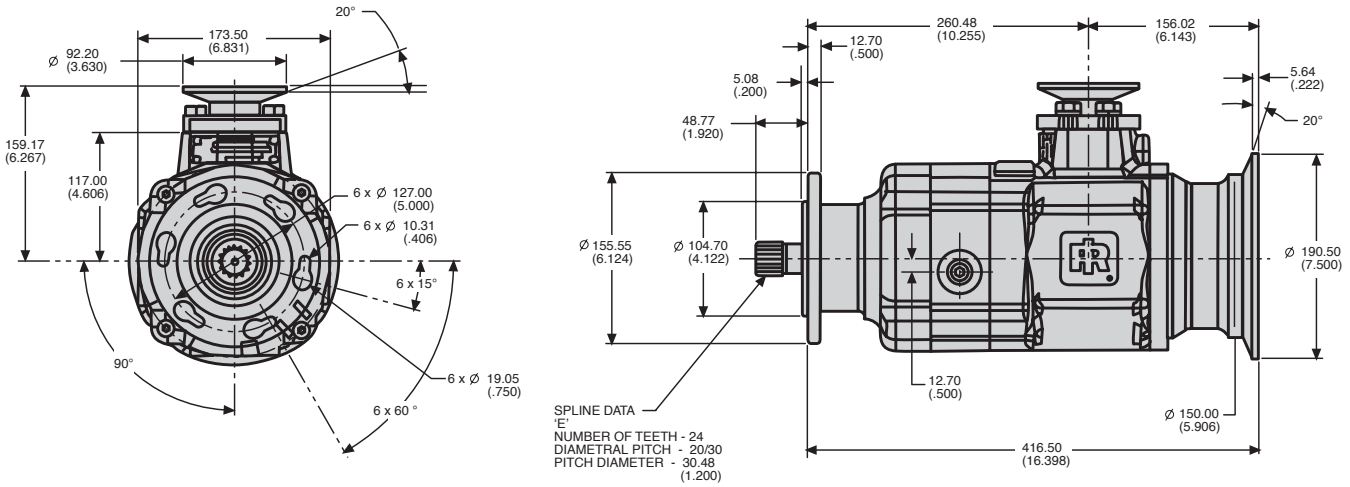

TS799GBFD-L DIMENSIONS

Weight lbs (kg)	
TS799GBFD-L	70 (31.8)

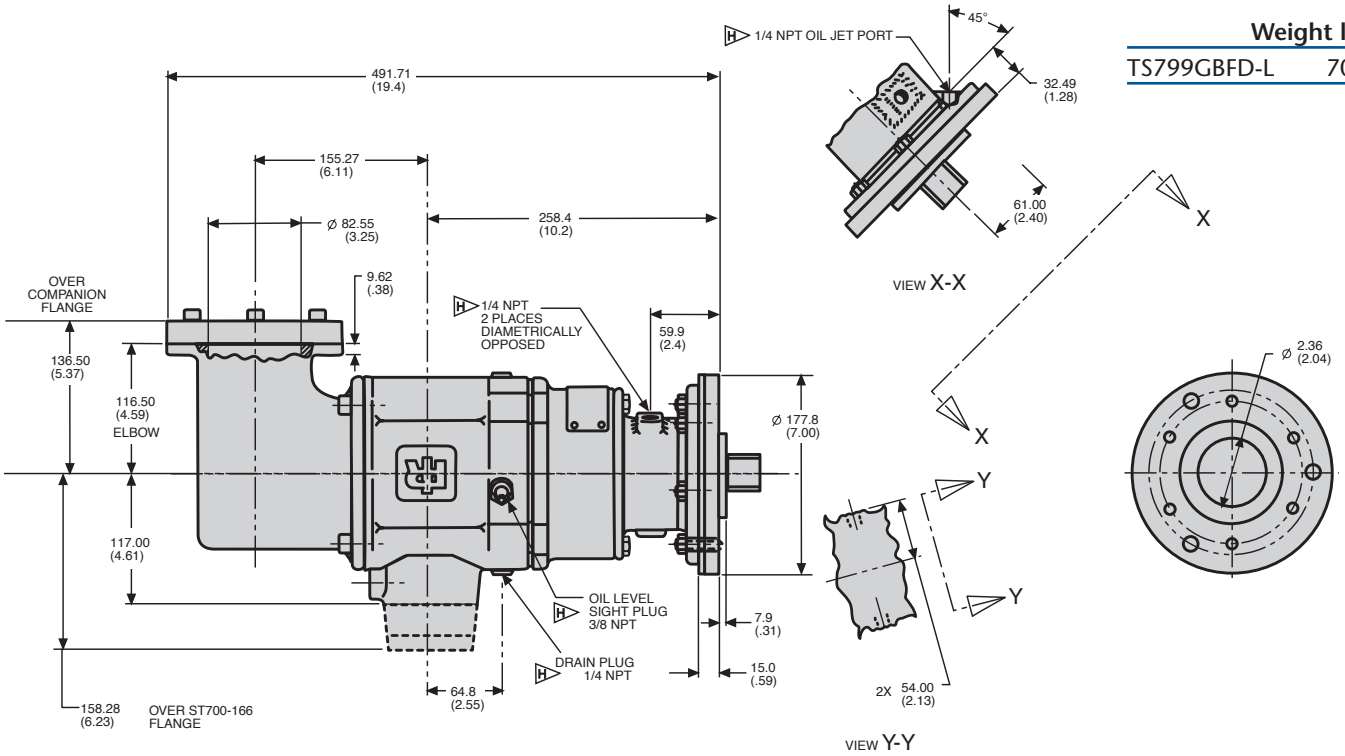

TS999GZCD-LE DIMENSIONS

Weight lbs (kg)	
TS999GZCD-LE	70 (31.8)

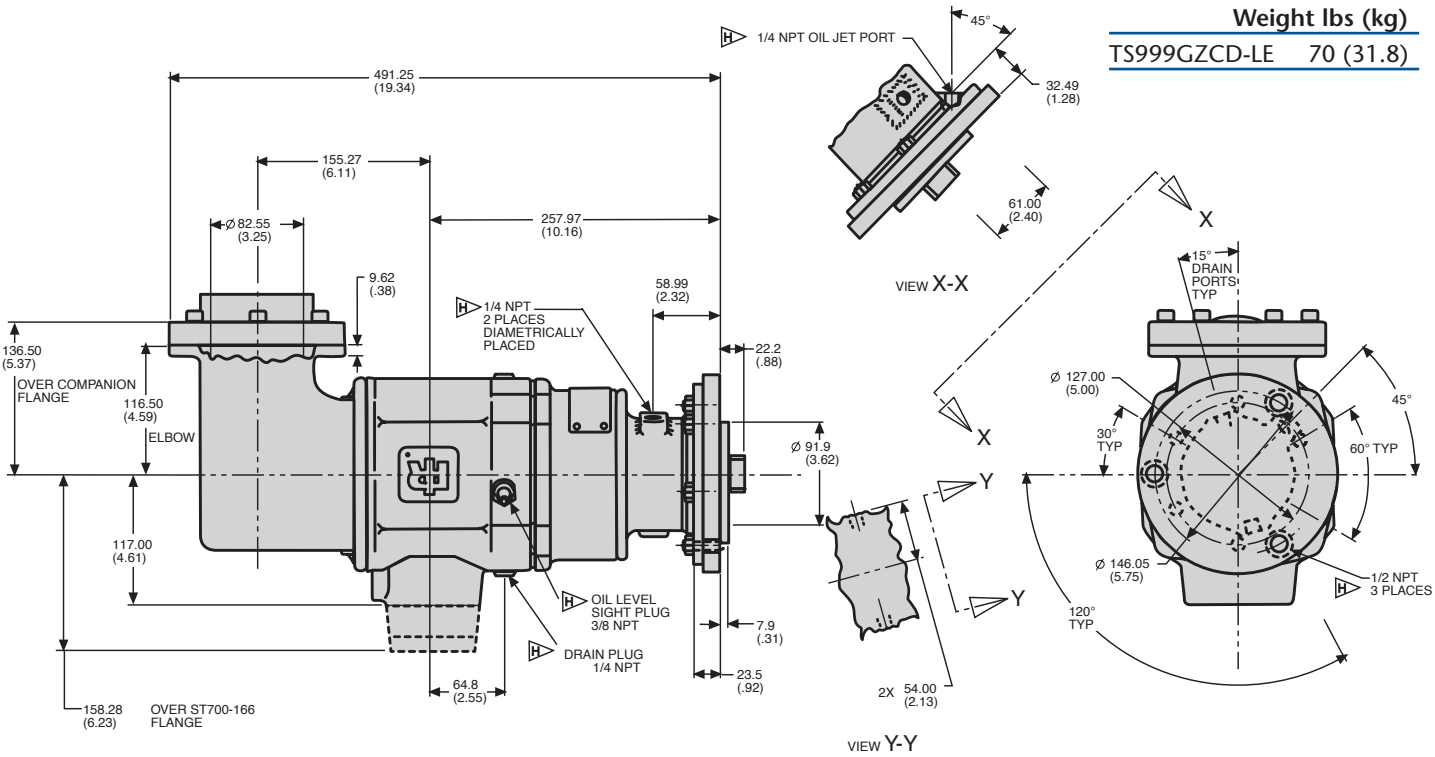

TS999GZFA-L DIMENSIONS

	Weight lbs (kg)
TS999GZFA-L	58 (26.3)

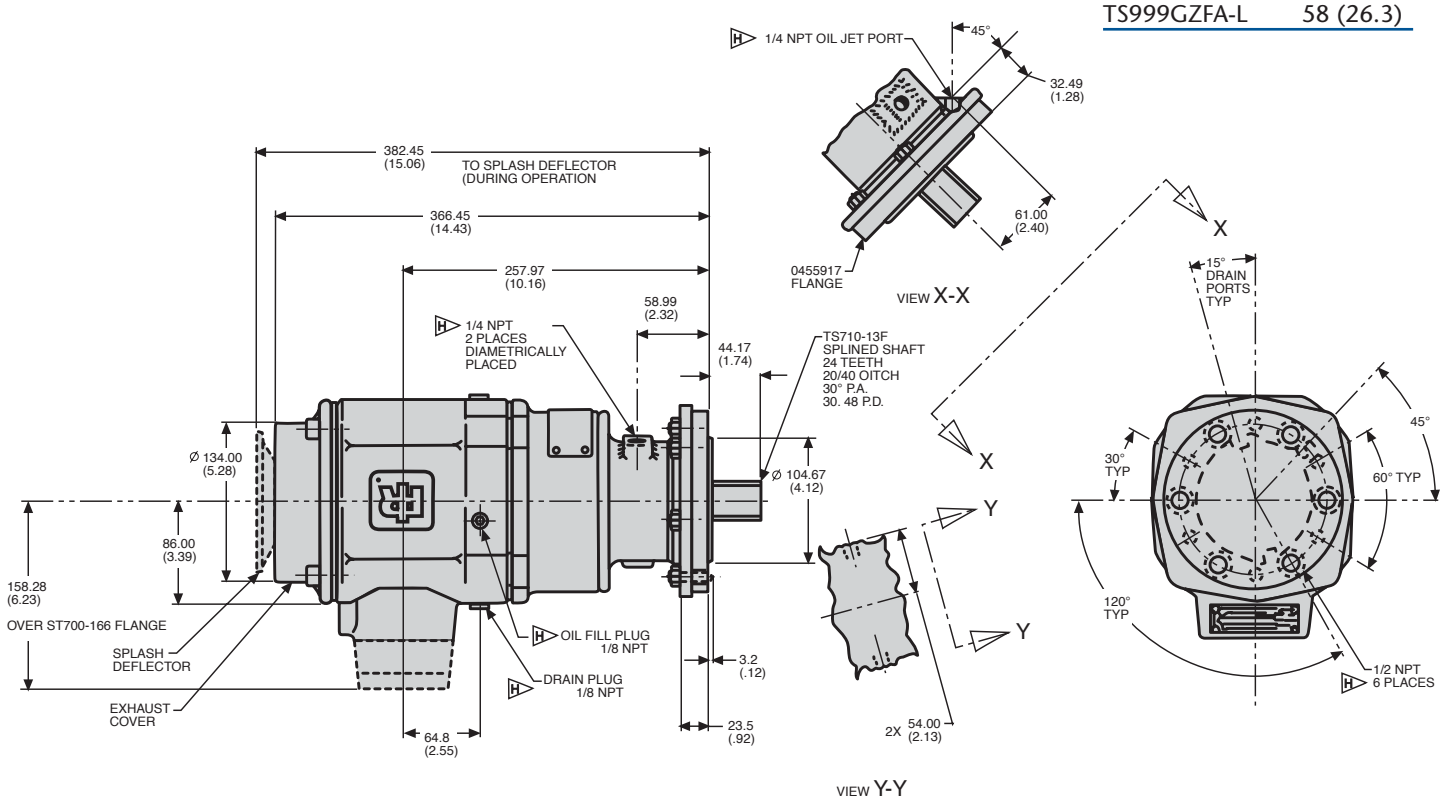

TS1400 Turbine Units DIMENSIONS

	Weight lbs (kg)
TS1400	124 (56.2)

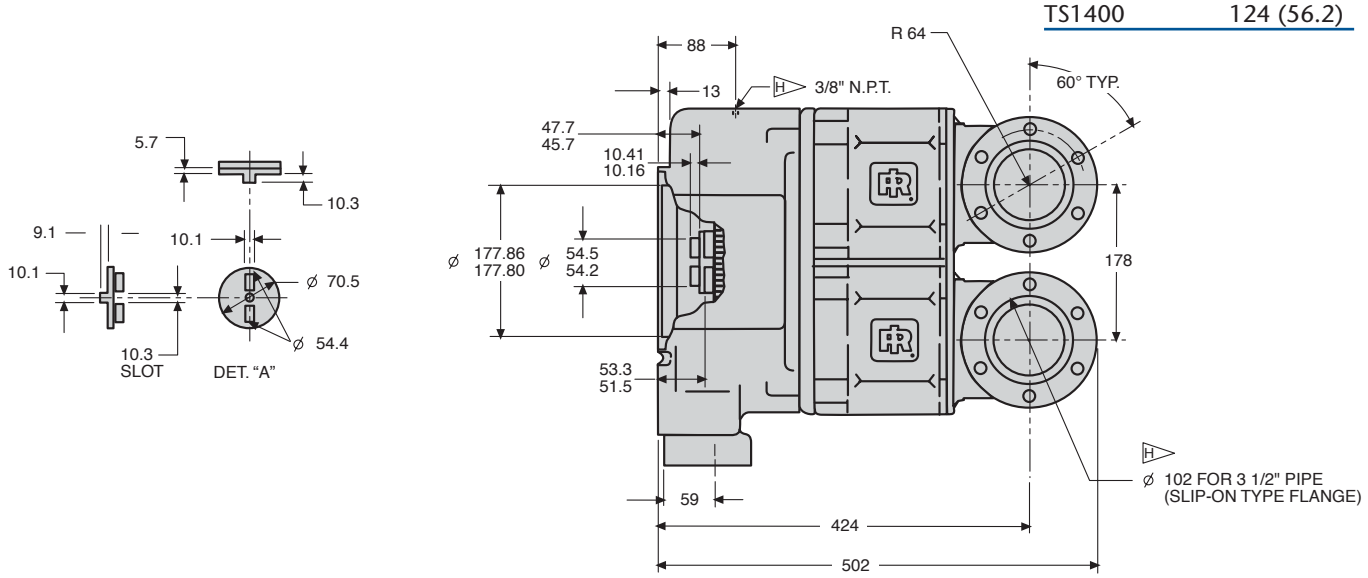

TS725 Performance Information

Pressure PSI (bar)	Breakaway Torque ft-lb (Nm)	Speed @ Max HP RPM	Max Power HP (kw)	Flow @ Max HP SCFM (L/s)
90 (6.2)	110 (149)	2000	18 (13)	330 (156)
150 (10.3)	180 (243)	2300	40 (30)	515 (243)
225 (15.5)	270 (365)	2500	65 (49)	750 (354)

TS750 Performance Information

Pressure PSI (bar)	Breakaway Torque ft-lb (Nm)	Speed @ Max HP RPM	Max Power HP (kw)	Flow @ Max HP SCFM (L/s)
90 (6.2)	170 (230)	2200	30 (22)	850 (401)
120 (8.3)	240 (325)	2300	50 (37)	990 (467)
150 (10.3)	300 (407)	2500	70 (52)	1210 (571)

TS799G Performance Information

Pressure PSI (bar)	Breakaway Torque ft-lb (Nm)	Speed @ Max HP RPM	Max Power HP (kw)	Flow @ Max HP SCFM (L/s)
60 (4.1)	250 (339)	2400	55 (41)	1050 (496)
90 (6.2)	310 (420)	2500	70 (52)	1400 (661)

TS799B Performance Information

Pressure PSI (bar)	Breakaway Torque ft-lb (Nm)	Speed @ Max HP RPM	Max Power HP (kw)	Flow @ Max HP SCFM (L/s)
150 (10.3)	570 (773)	2500	130 (97)	2200 (1038)

TS999 Performance Information

Pressure PSI (bar)	Breakaway Torque ft-lb (Nm)	Speed @ Max HP RPM	Max Power HP (kw)	Flow @ Max HP SCFM (L/s)
90 (6.2)	125 (169)	5500	71 (53)	1300 (614)

TS1400 Performance Information

IR Part Number	Solar Part Number	Max Pressure PSI (bar)	Breakaway Torque ft-lb (Nm)	Speed @ Max HP RPM	Max Power HP (kw)	Flow @ Max HP SCFM (L/s)	Motor Arc
TS1401-102	190475-102	225 (15.5)	420 (567)	3100	124 (93)	1700 (802)	25%
TS1435	190475-301	225 (15.5)	459 (620)	3882	141 (105)	1900 (896)	35%
TS1450	190475-401	150 (10.3)	506 (683)	3034	146 (109)	2500 (1179)	50%

TS Engine Selection Guide

This chart is a condensed list of engines that can be cranked with an IR starter. For a complete list, please contact IR.

Engine	IR Part Number	Solar Part Number	Max Pressure PSI (bar)
Solar Saturn	TS725GBBE-LE	190716-200	225 (15.5)
	TS725GBDE-LE	190716-100	225 (15.5)
	TS750GBBE-LE	-	150 (10.3)
Solar Centaur	TS1435	190475-301	225 (15.5)
	TS1450	190475-401	180 (12.2)
	TS1401-102	190475-102	225 (15.5)
Solar Taurus	TS1435	190475-301	225 (15.5)
	TS1450	190475-401	180 (12.2)
	TS1401-102	190475-102	225 (15.5)
Allison 570	TS799GBFD-L	-	90 (6.2)
Allison 501-KC	TS999GZFA-L	-	90 (6.2)
Allison 501-KB	TS999GZFA-L	-	90 (6.2)
Garret IE831	TS999GZCD-LE	-	90 (6.2)
Pratt & Whitney	TS799BBEF-LE	-	150 (10.3)
GG3/F13 , GG4/G14	TS799BBEF-LM	-	150 (10.3)

TS700/TS900 Output Spline Data

TS Part Number	Shaft Output Part Number	Teeth	Diametral Pitch	Pressure Angle	Pitch Diameter
TS725GBBE-LE	TS710-13E	24	20/30	30	30.48
TS725GBDE-LE	TS710-13E	24	20/30	30	30.48
TS750GBBE-LE	TS710-13E	24	20/30	30	30.48
TS799BBEF-LE	TS799-18E	24	20/30	30	30.48
TS799BBEF-LM	TS799-18E	24	20/30	30	30.48
TS799GBFD-L	4612834	16	20/30	30	20.32
TS999GZCD-LE	4612834	16	20/30	30	20.32
TS999GZFA-L	TS710A-13F	24	20/40	30	30.48

TS700/TS900/TS1400 Series Air Starters

TS700 & TS1400 Series Genuine Ingersoll-Rand Replacement Kits

Tune Up Kit Part Number	Description
TS1400-TK1	Seal and O-Ring Kit
TS1401-RM1	Seals, Bearings, and 2- 25% Arc Motors
TS1401-RM2	Seals, Bearings, and 2- 99% Arc Motors
TS1401-RM3	Seals, Bearings, and 2- 35% Arc Motors
TS1401-RM4	Seals, Bearings, and 2- 50% Arc Motors
TS1401-TK1	Seal and O-Ring Kit
TS700-RM1	Bearing and O-Ring Kit (Includes TS700-TK1)
TS700-TK1	O-Ring Kit

TS700/TS900/TS1400 Series Accessories

	IR Part #	Description	Picture
1	SRV150	1-1/2" Relay Valve For Air	
2	SRV150SS	1-1/2" Gas Rated Relay Valve	
3	150BMP-1064	1/8", 150 psi Pressure Gauge	
4	ST900-267-24	1-1/2"Strainer (300 Mesh)	

	IR Part #	Description	Picture
5	ST900-267-32	2" Strainer (300 Mesh)	
6	ST900-266-24	1-1/2"Strainer Element (300 Mesh)	
7	ST900-266-32	2" Strainer Element (300 Mesh)	

See catalog pages J-1 to J-18 for detailed Accessory information.