Force 5™ "Offshore" Man Rider™ Series
330 to 6870 lb (150 to 3117 kg) capacity

Ingersoll-Rand

Known worldwide as the standard for meeting the toughest personnel lifting requirements in the offshore industry.

Dual rated for personnel and utility lifting applications, these winches have Type Approval or Independent Review certificates issued by the classification societies of ABS, DNV or LRS. Meet NPD, NMD and UK HSE regulations for personnel lifting operations. Oil field tough to weather the harsh environments in marine applications.

Definitions

■ ***Third party:*** An independent certifying agency that offers formalized review and approval programs for Man Rider winches accepted for suitability to lift personnel. Recognized third party agencies are:

- American Bureau of Shipping (ABS)
- Det Norske Veritas (DNV)
- Lloyd's Register of Shipping (LRS)

■ ***Type Approval:*** A comprehensive design review by an independent third party which examines the intended service and application, winch ratings, design calculations of load bearing components, product specifications and service restrictions or limitations. A plant survey is also conducted to verify that quality control procedures and features are adequate and consistent. Upon successful completion, a ***Type Approval*** certificate is issued.

■ ***Third Party Certification:*** A review process of quality by an independent third party requested by the customer. Includes:

1. Type Approval certificate (design)
2. Third party survey during manufacturing (quality)
3. Third party witness of performance testing (quality)
4. Issuance of certificates as required by regulatory agency acknowledging compliance.

■ ***Standard features:***

- Enclosed automatic oil bath "wet" disc brake is fully sealed against salt spray, dirt or moisture and provides trouble-free operation over thousands of lifting cycles.
- Manual drum mounted band brake for additional braking by operator
- Internal gearbox/disc brake combination for superior load control
- Corrosion resistant drum guard supports the weight of a 200 lb/ 91 kg person.

FA150KGMR

- Dual rated 8:1 design factor for manrider rating; 5:1 design factor for utility rating
- Compact, frame and fabricated alloy steel drum fit into tight spaces
- Standard operating temperature range is 0°C through 60°C; optional design temperature of -10°C or -20°C
- Minimum 18:1 drum diameter to wire rope diameter ratio reduces wire rope wear.
- Data book and "Type Approval" certificates available upon request.
- Marine 812 paint system on FA150KGMR models.

■ ***Options and accessories:***

- Automatic band brakes
- Variable drum lengths
- Grooved drums
- Drum divider flange
- Upper and lower limit switches
- Corrosion resistant marine grade coating system: sandblast to white metal finish and carbozinc primer with a Marine 812 finish
- Remote controls
- Air prep package: filter, lubricator, strainer, liquidator and regulator
- Muffler
- Hydraulic models
- Electric-Over-Air remote control pendent for unlimited pendent length
- Third party certifications for low temperature applications

Specifications: performance is based on 90 psi (6.3 bar) air inlet pressure with motor running

Model no.	Force 5 MR ratings at top layer: Personnel (1) lbs	Personnel kg	Utility (2) lbs	Utility kg	Personnel rating avg line speed fpm	m/min	Maximum stall pull lbs	kg	Average air consumption scfm	m³/min	Pipe inlet size in.	mm	Hose size in.	mm	Shipping weight lbs	kg
FA150KG12MR-1-E	330	150	n/a	n/a	87	26	(3)	(3)	50	1.4	0.5	13	¾	19	750	340
FA2MR24MK1G	3180	1445	4400	2000	75	23	9000	4090	335	9.5	1¼	32	1¼	32	906	411
FA2.5MR24MK1G	3180	1445	5000	2273	159	48	10000	4545	700	19.9	1¼	32	1½	38	1178	534
FA5MR24MK1G	6870	3123	11000	5000	69	21	24000	10909	700	19.9	1¼	32	1½	38	2020	916
Force 5 Third Generation Man Rider Series ratings at mid layer (4)																
FA2BMR-MK1G	2500	1136	4000	1818	168	51	6800	3084	380	10.8	1¼	32	1½	38	786	357
FA2.5AMR-MK1G	3125	1420	5000	2273	173	53	10400	4727	560	15.9	1¼	32	1½	38	905	411
FA5AMR-MK1G	6250	2841	10000	4545	102	31	17000	7727	600	17.0	1¼	32	1½	38	1842	837

(1) "-E" models for European Union allow one lift capacity rating only; i.e., only personnel lift rating is allowed for both personnel and utility applications.
(2) Utility rating only for those countries that allow dual ratings, e.g. USA.
(3) Per NPD regulations
(4) Third Generation Man Riders are not available in CE format.

Rope storage for personnel lifting (1)

Model number	Drum length in.	Drum length mm	Rope diameter 10mm ft	10mm m	½" ft	13mm m	¾" ft	19mm m
FA150KGMR	8	203	474	144	–	–	–	–
	12	305	723	220	–	–	–	–
	16	406	972	296	–	–	–	–
	24	610	1470	448	–	–	–	–
FA2MR and FA2.5MR	8	203	–	–	321	97	–	–
	12	305	–	–	492	150	–	–
	16	406	–	–	663	202	–	–
	24	610	–	–	1006	306	–	–

(1) Based on UK HSE standards requiring top layer to be 2½ times the wire rope diameter below drum flange.

Model number	Drum length in.	Drum length mm	Rope diameter 10mm ft	10mm m	½" ft	13mm m	¾" ft	19mm m
FA5MR	8	203	–	–	–	–	235	72
	12	305	–	–	–	–	365	111
	16	406	–	–	–	–	495	151
	24	610	–	–	–	–	755	230
FA2BMR and FA2.5AMR	S 7	178	–	–	198	60	–	–
	M 13.5	343	–	–	396	120	–	–
	L 20	508	–	–	595	181	–	–
	R 24	610	–	–	717	218	–	–
FA5AMR	S 12	305	–	–	–	–	321	98
	L 24	610	–	–	–	–	663	202

Rope speed at mid drum at 90 psi

Winch series	at 330 lbs (150 kg) Up fpm	Up m/min	Down fpm	Down m/min	at personnel rating Up fpm	Up m/min	Down fpm	Down m/min	at utility rating Up fpm	Up m/min	Down fpm	Down m/min
FA150KGMR	87	26	100	31	87	26	100	31	n/a	n/a	n/a	n/a
FA2MR	121	37	60	18	72	22	125	38	53	16	140	43
FA2.5MR	235	71	125	38	160	49	155	47	113	34	190	58
FA5MR	94	29	60	18	69	21	55	17	54	16	70	21
FA2BMR	253	77	–	–	160	49	–	–	102	31	–	–
FA2.5AMR	257	78	–	–	173	53	–	–	117	36	–	–
FA5AMR	177	54	–	–	102	31	–	–	50	15	–	–

Dimensions

FA150KGMR with disc and manual brake in inches (mm)

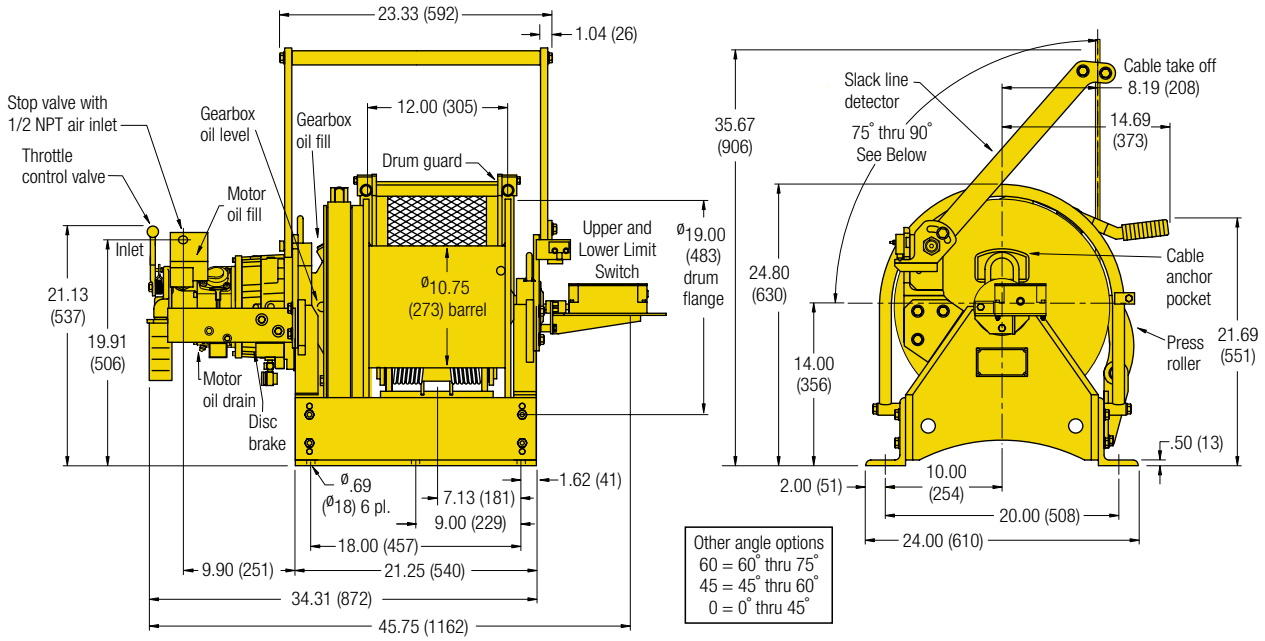

Dimensions are subject to change. Contact factory for certified prints

Dimensions

FA2MR24MK1G with disc and manual brake in inches (mm)

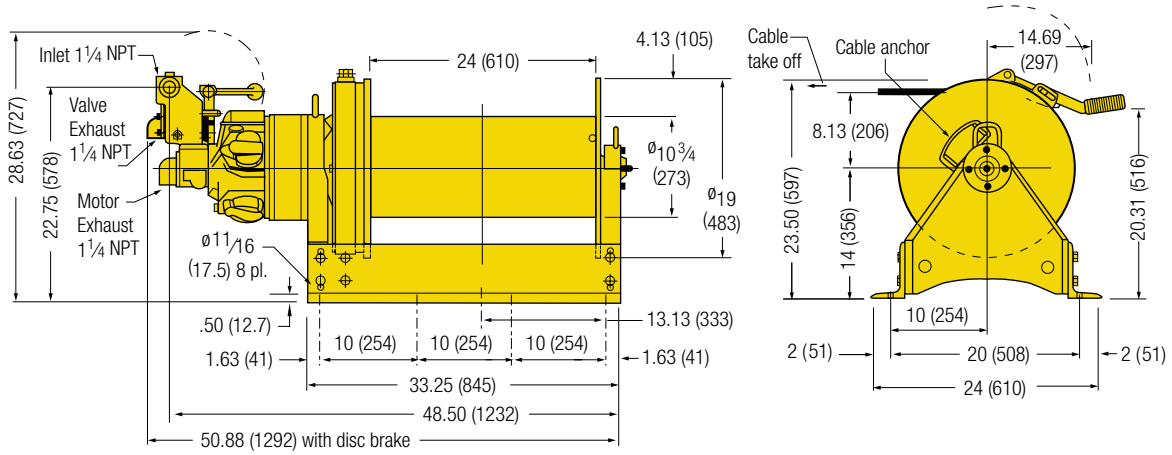

FA2.5MR24MK1G with disc and manual brake in inches (mm)

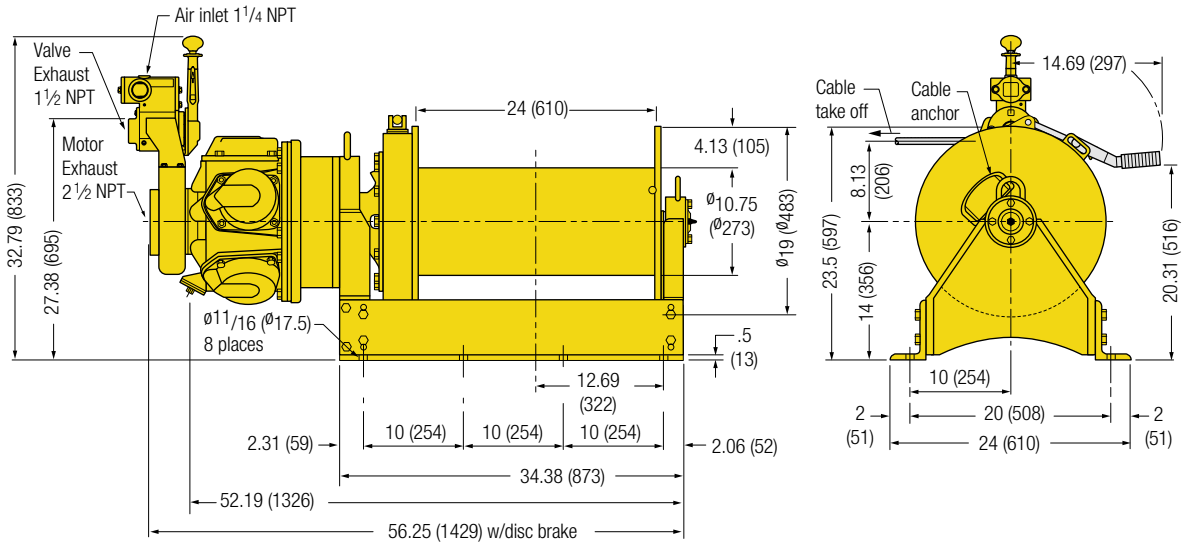

FA5MR24MK1G with disc and manual brake in inches (mm)

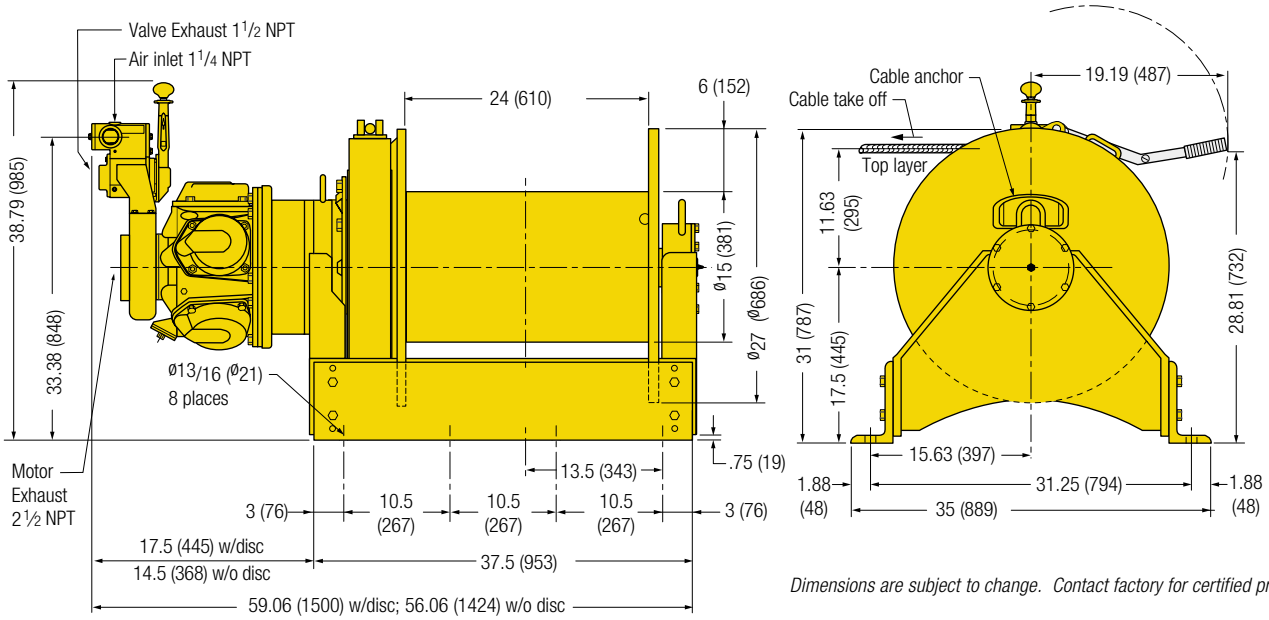

Dimensions are subject to change. Contact factory for certified prints

Dimensions

Model no.	A in.	A mm	B in.	B mm	C in.	C mm	D in.	D mm
FA2BMR-SMK1G	7.0	178	37.4	950	12.3	312	7.5	191
FA2BMR-MMK1G	13.5	343	43.9	1115	18.8	478	10.81	274
FA2BMR-LMK1G	20.0	508	50.4	1280	25.3	643	14.0	356
FA2BMR-RMK1G	24.0	610	54.4	1382	29.3	744	16.0	406

Dimensions

Model no.	A in.	A mm	B in.	B mm	C in.	C mm	D in.	D mm
FA2.5AMR-SMK1G	7.0	178	41.19	1046	12.31	313	7.50	191
FA2.5AMR-MMK1G	13.5	343	47.69	1211	18.81	478	10.81	274
FA2.5AMR-LMK1G	20.0	508	54.19	1376	25.31	643	14.00	356
FA2.5AMR-RMK1G	24.0	610	58.19	1478	29.31	744	16.00	406
FA5AMR-SMK1G	12.0	305	46.50	1181	17.89	454	10.50	266
FA5AMR-LMK1G	24.0	610	58.13	1486	29.89	759	16.50	419

FA2BMR in inches (mm)

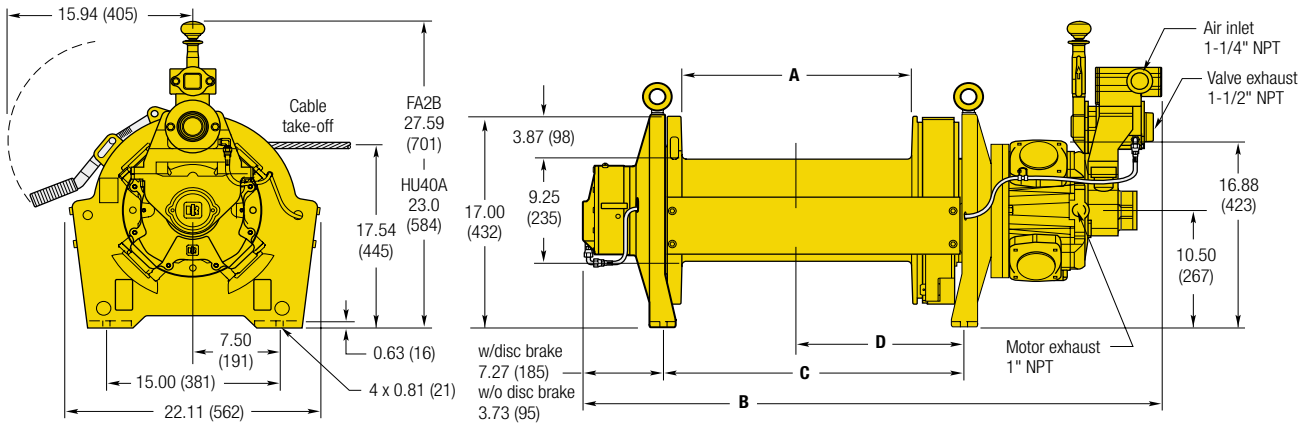

FA2.5AMR in inches (mm)

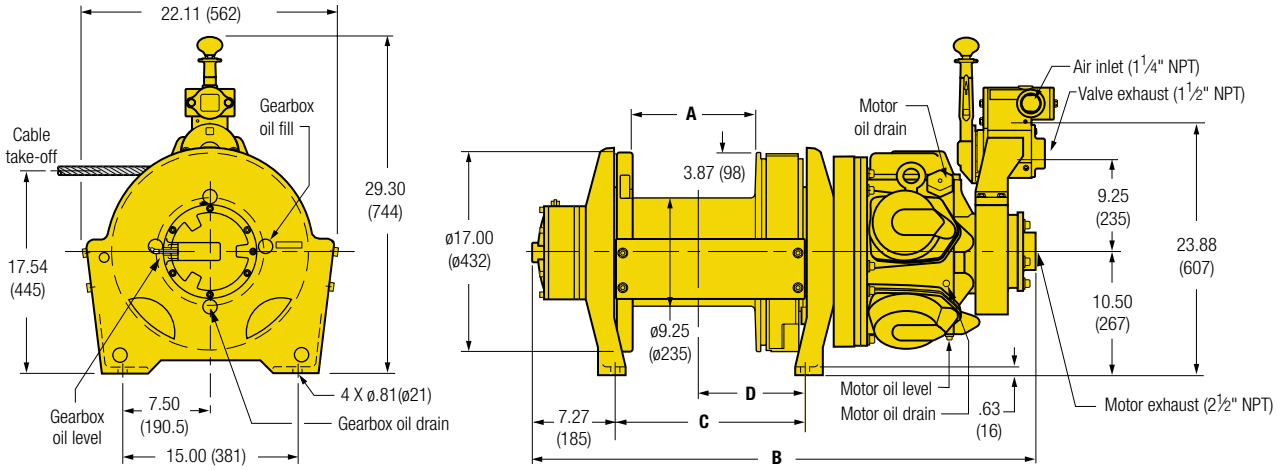

FA5AMR in inches (mm)

Dimensions are subject to change. Contact factory for certified prints

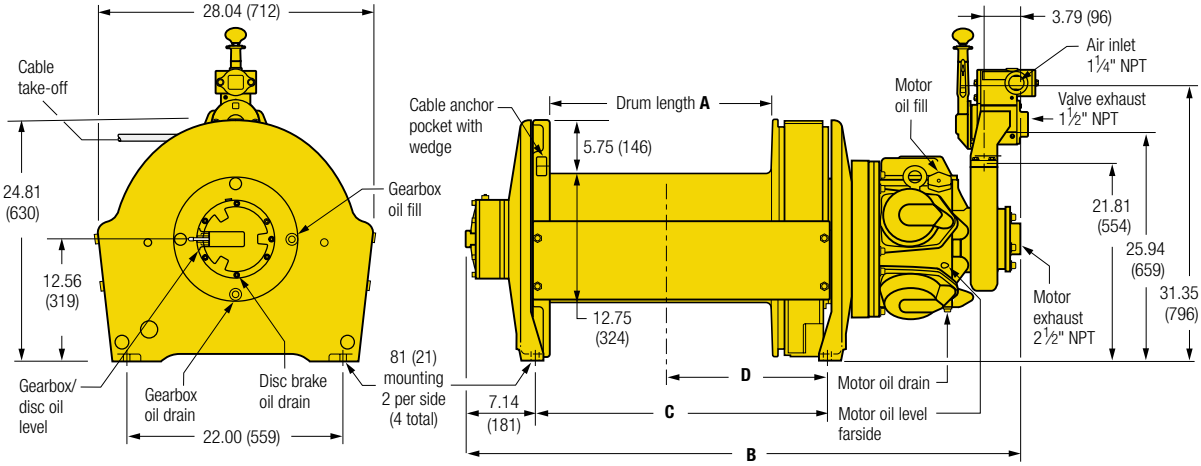

Force 5™ "Offshore" Man Rider™ Series
330 to 6870 lb (150 to 3117 kg) capacity

Ingersoll-Rand

How To Order:

Specify complete model code as shown. To order options, use the option code in the option table and add as a suffix to the model code. To order a Force Five air winch with a non-standard drum length, refer to the available drum lengths provided in the drum length table below. Enter the desired drum length for each winch in the drum length section of the model code. To order accessories such as filters and lubricators, enter these as separate accessory items by the part number in the air winch accessories table. **Example:** ***FA2.5MR24MK1GP***

Series	Personnel cap.	Man Rider cap.	Drum length	Drum brake	Disc brake	Control brake	Options (see notes below)
FA	***2.5***	***MR***	***24***	***M***	***K***	***1***	***GP***

Personnel cap.

150KG = 330 lbs (150 kg) (Contact technical sales for special model driver)
2B = 2500 lbs (1136 kg)
2.5A = 3125 lbs (1420 kg)
2 = 3180 lbs (1445 kg)
2.5 = 3180 lbs (1445 kg)
5A = 6250 lbs (2841 kg)
5 = 6870 lbs (3111 kg)

Force Five
FA = Air powered
FH = Hydraulic powered

MR = Man Rider

24 = 24" (610 mm) between flanges. See drum length charts below.

Drum brake

A = Auto drum brake
M = Manual drum brake (std)

K = Auto disc (std)

1 = Standard winch mounted throttle
2XX = Remote full flow lever throttle (max 20 ft/6 m)
3XX = Remote pilot pendent throttle (std = 6 ft/1.8 m; max 66 ft/20 m) (1)
4XX = Remote pilot lever throttle (std = 6 ft/1.8 m; max 66 ft/20 m) (1)
5XX = Remote electric over air throttle
XX = Specify hose length or pendent cord in feet

Options (see notes below)

7 = Drum grooving (specify rope size in sixteenths, e.g. 7 = 7/16") (2)
C = Low temperature; please specify in text: -10° C or -20° C
D = Drum divider flange and additional cable anchor (3)
G = Drum guard
L = Drum locking pin (5)
M1 = Per DIN 50049/En10204 Para 2.2 "Typicals" (4)
M2 = Per DIN 50049/En10204 Para 3.1b actual per product as purchased (4)
M3 = Per DIN 50049/En10204 Para 3.1b actual per product as delivered in final condition (4)
N = Type approval; please specify in text: DNV, ABS or Lloyds
P = Corrosion resistant marine grade coating system: sandblast to white metal finish and carbozinc primer with a Marine 812 finish
Q = Special paint; please specify
S = Limit switch (upper and lower) (5)
U = Underwound (available only with autodisc brake ***XK***)
V = Press roller
W = Witness; please specify
X = Special testing; please specify
Z = Sandblast and carbozinc primer only
-E = Compliance with European Machinery Directive (insert at end of model code) (5)

Notes:
All Force 5 units come with standard six (6) strand wire rope anchor and winding directions for right hand overwind.

Option Notes:

(1) With remote pilot control option, line speeds will decrease.
(2) Number designates drum grooving. Number equals wire rope size in sixteenths. The standard will be based on a right hand overwind rotation and spiral grooving for the recommended size of wire rope for the standard length of drum only. Grooving involving longer or shorter drums, or drums equipped with a divider flange will be an engineered item with longer lead time.
(3) ***D*** = drum divider flange. The standard will be based on right hand over wind rotation. Two steel flanges are welded to the center of the drum. This provides the motor side of the drum (half) with a rope anchor. Anchor locations must be specified by the customer.
(4) Documentation, witness testing and material traceability available; must be requested at time of order. Specify options or contact factory or your nearest IR distributor for information.
M1 Material traceability certificates according to EN 10204 (Ex DIN 50049) 2.2 on load bearing parts. This conformity document affirms (by the manufacturer) that parts are in compliance with the requirements of the order based on non-specific inspection and testing (i.e. results are typical material properties for these parts.)
M2 Material traceability certificates according to EN 10204 (Ex DIN 50049) 3.1b on load bearing parts. These documents affirm (by a department independent of the manufacturing department) that the actual parts used in the product are in compliance with the order based on specific inspection and testing (i.e. results are actual material properties for those parts.)
M3 Material traceability certificates according to EN 10204 (Ex DIN 50049) 3.1b on load bearing parts. These documents affirm (by a department independent of the manufacturing department) that the actual parts used in the product are in compliance with the order based on specific inspection and testing (i.e. results are actual material properties for those parts in a finished, as delivered condition.)
(5) Not available on Third Generation Series

Drum lengths		
FA2B & FA2.5A	**in.**	**mm**
S	7	178
M	13 ½	343
L	20	508
R	24	610
FA5A		
S	12	305
L	24	610

Drum lengths available in. (mm)

Model	8 (203)	12 (305)	16 (406)	24 (610)	30 (762)	36 (914)
FA150KG	yes*	***Std***	yes*	yes	yes*	yes*
FA2	yes	yes	yes	***Std***	yes*	yes*
FA2.5	yes	yes	yes	***Std***	yes	yes
FA5	no	yes	yes	***Std***	yes	yes

Contact factory for lengths other than shown.
* Special order

Special optional requirements for offshore compliance are available (see codes above where applicable):

- Material traceability
- Charpy testing
- Certificate of compliance
- Third party witness
- Customer witness
- Special documentation
- Regulatory agency certification
- Low temperature materials

Man Rider winches have been designed and built to meet the requirements of the Offshore Oil Industry, particularly those specifications of the Norwegian Maritime Directorate, the Norwegian Petroleum Directorate and the UK HSE. They are Type Approved by Lloyds Register of Shipping, Det Norske Veritas (DNV) and the American Bureau of Shipping (ABS). There is no standard covering the use of these Man Riders in other than the offshore environment. It is, therefore, the user's responsibility to determine the suitability of this product for any particular use and to check for compliance with applicable regulations.

Liftstar "Offshore" Man Rider™ Series
330 to 2200 lb (150 to 1000 kg) capacity

Ingersoll-Rand

Designed to the toughest Type Approval standards issued by the classification societies and meets NPD, NMD and UK HSE regulations for personnel lifting operations on offshore installations. The "Liftstar Man Rider" is a dedicated personnel lifting winch offered with Det Norske Veritas (DNV) Type Approval and full traceability.

Liftstar 150 kg / Pneumatic:

The LS150RLP…-E models have been specifically designed for personnel lifting applications in which a safety harness or a boatswain's chair is used on fixed installations. They have passed the DNV (Det Norske Veritas) EC testing for these applications, i.e., both the winches and their technical files are in compliance with the requirements of the EC Machinery Directives.

The LS150RLP-DP5M-F model is in compliance with section 28 of the NPD (Norwegian Petroleum Directorate) regulation for manriding applications using a safety harness in petroleum drilling and well activities on mobile/floating installations.

Pneumatic and hydraulic models– 500 and 1000 kg capacity:

For use with assemblies using a platform, basket, carrier, etc… These models should be considered "part machines," as they are intended for incorporation into an assembly consisting of a platform, a suspension system, etc… Therefore, they are delivered without the CE mark, but with a Declaration of Incorporation. However, since they are equipped with selected safety options, when the user applies for EC compliance of the entire personnel lifting system, the winch "part" will meet the EC requirements.

Standard features:

All models:

- Two independent automatic brakes: an internal oil bath multidisc brake and an external drum band brake. Each can hold 180% of SWL.
- Flange mounted overload protection device
- Direct lever control with fine inching characteristics and automatic return to neutral when brakes are applied
- Main air emergency stop (for air models only)
- High efficiency planetary gearing is inside drum for better protection and minimum overall dimensions
- Hot dip, galvanized drum guard
- Sandblasting, carbozinc primer and offshore paint 290µ
- 3.1b material traceability certificates according to DIN 50049 (EN 10204) for load bearing parts available upon request at time of order
- Stainless steel external brake cylinder and control rods
- All external fasteners larger than 10 mm are stainless steel or electro-zinc plated
- Delivered with skid frame for easy installation

LS1000RLP Man Rider

The LS150RLP…-E and the LS150RLP-DP5M-F models:

- Upper and lower limit switches
- Slack wire detector
- Assisting spooling device – for better rope winding at no load
- Pre-equipped emergency lowering device (pressurized nitrogen bottle not supplied)

Additional standard features:

- The LS150RLP-…-E includes a CE manual for installation and operation
- The LS150RLP-DP5M-F includes a rope payout system and filter-regulator-lubricator assembly

Options

All models:

- Witness test(s) by a third party (DNV, Lloyd's, ABS, etc)

500 and 1000 kg capacity models

- Upper and lower limit switches
- Assisting spooling device
- Pre-equipped emergency lowering device for air model only (pressurized nitrogen bottle not supplied)
- Slack wire detector (electric on hydraulic models)

All models except LS150RLP-DP5M-F:

- PHS remote control piloted pendent allows infinitely variable up and down speeds with complete operator control. Fitted with an emergency stop device which acts directly on the main air flow

Liftstar "Offshore" Man Rider™ Series
330 to 2200 lb (150 to 1000 kg) capacity

Ingersoll-Rand

Specifications – pneumatic models at 90 psi (6.3 bar)

Model no.	Rated working load lbs	kg	Hoisting speed(1) fpm	m/min	Rec'd rope dia in.	mm	Free air consumption scfm	m³/min	Motor power hp	kw	Weight w/o rope lbs	kg
LS150RLP-E	330	150	0 to 115	0 to 35	3/8	10	0 to 78	0 to 2.2	2	1.5	250	114
LS500RLP	1100	500	0 to 79	0 to 24	1/2	13	0 to 123	0 to 3.5	3	2.2	300	136
LS1000RLP	2200	1000	0 to 79	0 to 24	1/2	13	0 to 123	0 to 3.5	6	4.5	300	136

Specifications – hydraulic models

Model no.	Rated working load(2) lbs	kg	Maximum speed(3) fpm	m/min	Rec'd rope dia in.	mm	Maximum working flow gpm	l/min	Working pressure psi	bar	Weight w/rope lbs	kg
LS500HLP	1100	500	98	30	1/2	13	6.3	24	1499	105	638	290
LS1000HLP	2200	1000	98	30	1/2	13	9.8	37	1785	125	638	290

(1) For hydraulic models: at last (4th) rated layer
(2) For pneumatic models: at rated load
(3) For pneumatic models: at mid-drum with rated load

Performance

13 mm rope at 1499 psi (105 bar) 6.3 gpm (24 l/min)

Model no.	Rated layers	Line pull lbs	kg	Line speed fpm	m/min
LS500HLP	1	1397	635	77.1	23.5
	2	1283	583	84.3	25.7
	3	1184	538	91.2	27.8
	4	1100	500	98.4	30.0
13 mm rope at 1785 psi (125 bar) 9.8 gpm (37 l/min)					
LS500HLP	1	2794	1270	77.1	23.5
	2	2565	1166	84.3	25.7
	3	2369	1077	91.2	27.8
	4	2200	1000	98.4	30.0

Dimensions

LS150RLP pneumatic winch in inches (mm)

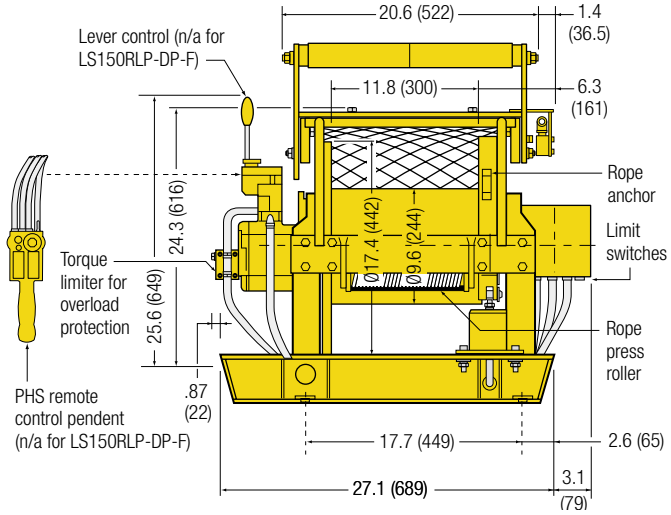

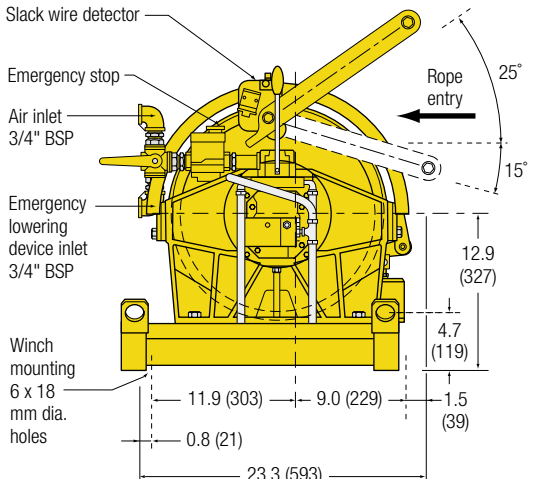

LS500RLP and LS1000RLP pneumatic winches in inches (mm)

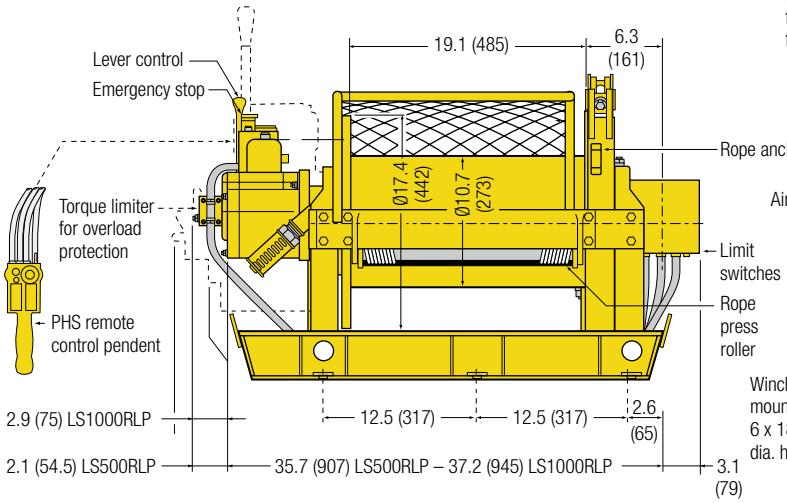

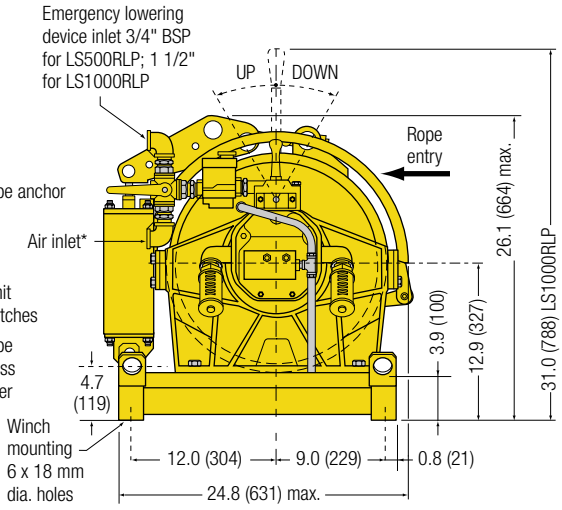

Dimensions are subject to change. Contact factory for certified prints

Cumulative rope capacity

Model no.	Rec'd rope dia. in.	Rec'd rope dia. mm	Rope capacity according to number of layers (1) 1 ft	1 m	2 ft	2 m	3 ft	3 m	4 ft	4 m	5 ft	5 m	6 ft	6 m	7 ft	7 m	8 ft	8 m
Pneumatic models																		
LS150RLP-E	3/8	10	72	22	151	46	233	71	325	99	420	128	522	159	630	192	685	741
LS500RLP	1/2	13	102	31	213	65	335	102	466	142	597	185	754	230	–	–	–	–
LS1000RLP	1/2	13	102	31	213	65	335	102	466	142	597	185	754	230	–	–	–	–
Hydraulic models																		
LS500HLP	1/2	13	102	31	213	65	335	102	466	142	597	185	754	230	–	–	–	–
LS1000HLP	1/2	13	102	31	213	65	335	102	466	142	597	185	754	230	–	–	–	–

(1) Figures in bold type correspond to layers rated for personnel lifting.

Dimensions

LS500RLP and LS1000RLP hydraulic winches in inches (mm)

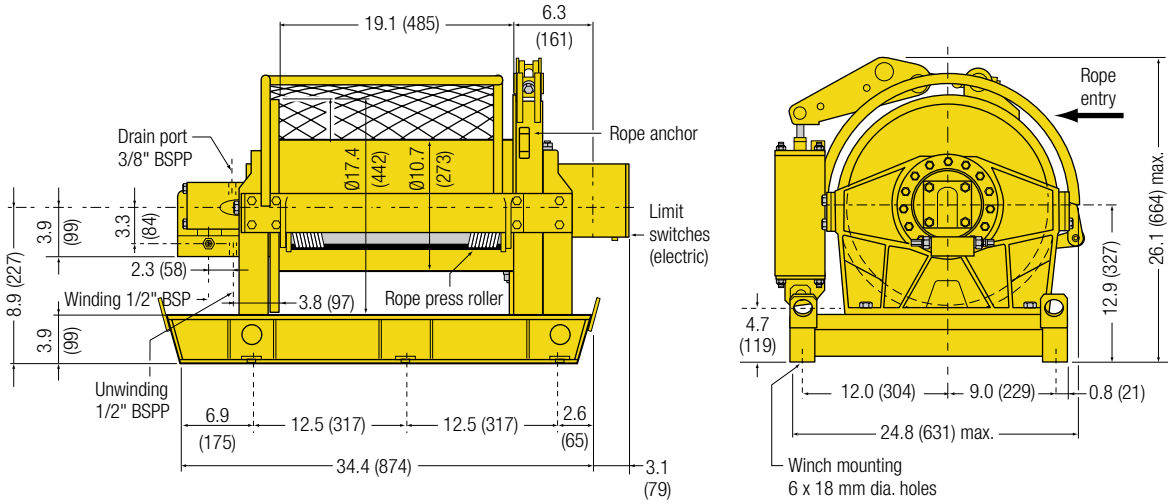

Dimensions are subject to change. Contact factory for certified prints

How To Order:

Specify complete model code as shown. Specify options in the model code and accessories as a separate line. **Example:** ***LS500RLP-L-S***

Series	Capacity	Power source	Personnel lift	-	Control	Rope take-off	Options
LS	***500***	***R***	***LP***	***-***	***L***	***L***	***S***
LS = Liftstar winch series	150-E = 150 kg / 330 lbs (Comes standard with European CE package) ***500*** = 500 kg / 1100 lbs 1000 = 1000 kg / 2200 lbs	***R*** = Air H = Hydraulic (w/o control; brake valve and overload protection flanged as standard)	***LP*** = Includes std features, i.e., second auto brake, skid and drum guard		***L*** = Lever PH = PHS remote pendent (hose length on request; max. length 66 ft / 20 m) DP = Control console with full flow remote control valve (std length 8 ft / 2.5 m)	***-*** = Horizontal B = Vertical (LS150RLP only)	10 = Grooved drum for 10 mm rope 13 = Grooved drum for 13 mm rope E = Emergency lowering system (option for 500 and 1000 kg models; std for all LS150RLP models) R = Press roller ***S*** = Upper and lower limit switches (option for 500 and 1000 kg models; std for all LS150RLP models) Y = Slack wire protection (option for 500 and 1000 kg models; std for all LS150RLP models)