I.R.E.P S.A.S
59450 Sin le Noble - France
Tel.: +33 (0) 27 93 08 08
Fax: +33 (0) 27 93 08 00

Copyright © 2008.Ingersoll-Rand Company
All Rights reserved.

LIFTCHAIN LC2A Series
Model LC2A060Q...-E
Hook Mount
6 Ton Lifting capacity

IREP Drawing Number	Rev.
05/09/02-L644	B
Customer Drawing Number	
Folio :	1/1
Engineering Mgr. Approval : JLF	

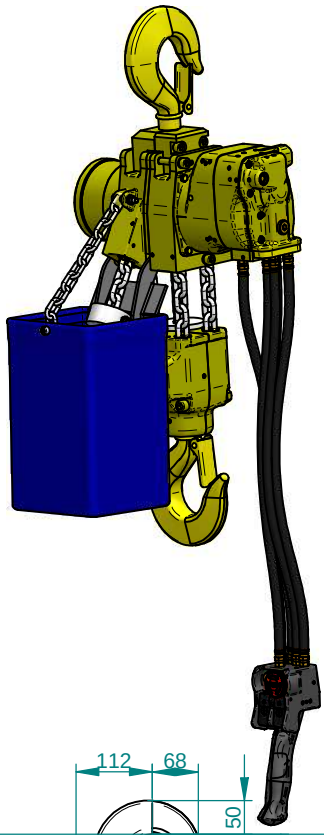

Standard Features :

- Rugged and Compact modular design
- Design temperature -10℃
- Explosion proof - 100% duty rating - No downtime
- Gear type air motor with high starting torque providing long life
- Variable speed control at pilot pendent or pull chain
- Overload protection device adjusted at factory during load tests
- Main air emergency stop at pendent as per EN 418
- Top and bottom limit switches intergrated in hoist body for better protection
- Automatic fail safe disc brake (no adjustment required)
- Zinc plated load chain for corrosion resistance
- Exhaust muffler for quiet operation
- Suitable for horizontal pulling applications
- Low maintenance cost
- Individually load tested before shipment
- Excellent spotting characteristics: PHS progressive remote pilot pendant or pull chain control

It is strongly recommended to use a lubricating and a filtration system on the compressed air line.
The compressed air temperature must not exceed 65℃ at the motor air inlet.
For higher temperature, please consult us.

Options:

- Spark resistant package for ATEX zone 1
- Chain containers
- Marine or offshore paint including sandblasting
- Trolley mount versions (plain, geared or motorized)
- Mining versions and hydraulic versions available

Ex classifications (ATEX)

- Standard version is suitable for Zone 2
  (ATEX Marking Ex II 3 GD c IIB 135℃ x)
- Optional spark resistant package is suitable for Zone 1
  (ATEX marking Ex II 2 GDc IIB135℃x)

FEM classification

- Driving mechanism classification 1Bm

Built in ISO 9001 certified factory

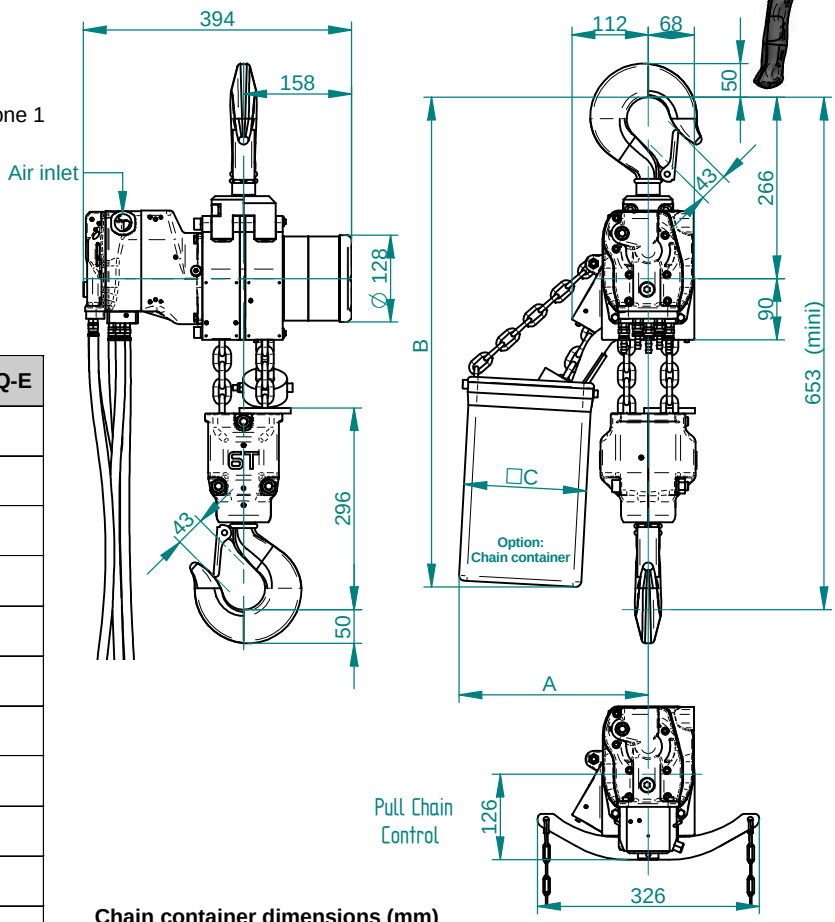

Technical data at 6.3 bar

Model	LC2A060Q-E
Rated Capacity (metricTon)	6
Falls of chain	4
Lifting speed at rated load (m/min)	1.5
Lifting speed at no load (m/min)	2.5
Lowering speed at rated load (m/min)	2
Working pressure range (Bar)	4 to 7
Air consumption at rated load (m^3/min)	4
Minimum headroom (mm)	653
Air inlet (BSP)	3/4
Chain size (mm)	8x24
*Weight with std lift (Kg)	74
Chain Weight per meter of lift (kg)	6

**Net weight is given with standard lift of 3m and standard control length of 2m*

Chain container dimensions (mm)

Height of lift	A	B	C	Option code
3 m	275	721	180	A
7.5 m	325	821	230	B
15 m	405	921	315	C

The equipment described on this sheet is subject to the general sales and warrantly conditions of Ingersoll-Rand company. Because of the constant evolution of technology, Ingersoll-Rand company reserves the right to modify without notice the specifications contained in this document.