I.R.E.P S.A.S
59450 Sin le Noble - France
Tel.: +33 (0) 27 93 08 08
Fax: +33 (0) 27 93 08 00

Copyright © 2008.Ingersoll-Rand Company
All Rights reserved.

# LIFTCHAIN LC2A Series
# Model LC2A250Q...-E
## Trolley Mount
## 25 Tons Lifting capacity

| IREP Drawing Number | Rev. |
|---|---|
| 08/04/33-L645 | A |
| Customer Drawing Number | |
| | |
| Folio : | 1/1 |
| Engineering Mgr. Approval : JLF | |

**Standard Features :**
- Rugged and Compact modular design
- Design temperature -20℃
- Explosion proof - 100% duty rating - No downtime
- Gear type air hoist motor with high starting torque providing long life
- Variable speed control at pilot pendent (4 buttons)
- Overload protection device adjusted at factory during load tests
- Main air emergency stop at pendent as per EN 418
- Top and bottom limit switches intergrated in hoist body for better protection
- Automatic fail safe disc brake (no adjustment required) on hoist and trolley motor
- Zinc plated load chain for corrosion resistance
- Exhaust muffler for quiet operation
- Sound pressure level < 84 dBA
- Low maintenance cost
- Individually load tested before shipment

*It is strongly recommended to use a lubricating and a filtration system on the compressed air line.*
*The compressed air temperature must not exceed 65℃ at the motor air inlet.*
*For higher temperature, please consult us.*

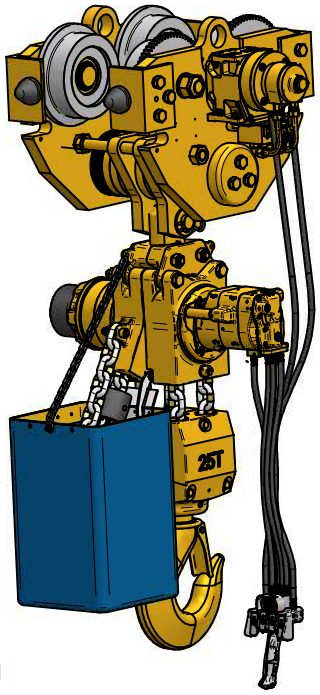


***Options:***
- Spark resistant package for ATEX zone 1
- Chain containers
- Marine or offshore paint including sandblasting
- Mining versions and hydraulic versions available

***Ex classifications (ATEX)***
- Standard version is suitable for Zone 2
  (ATEX Marking Ex II 3 GD c IIB 135℃ x)
- Optional spark resistant package is suitable for Zone 1
  (ATEX marking Ex II 2 GDc IIB135℃x)

***FEM classification***
- Driving mechanism classification 1Bm

***Built in ISO 9001 certified factory***

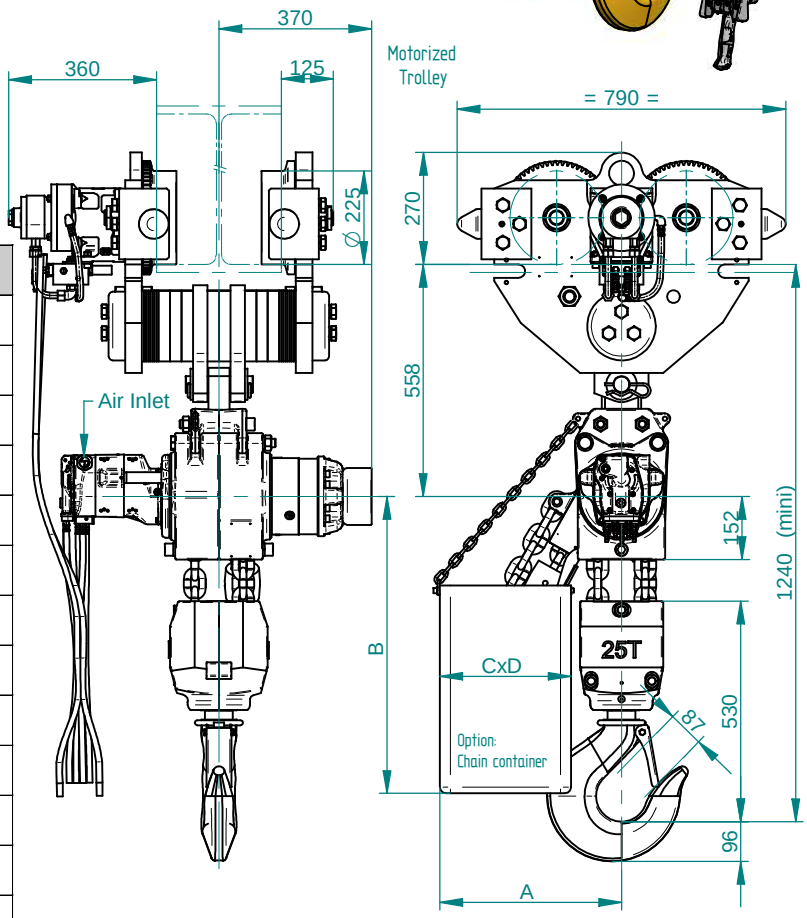


**Technical data at 6.3 bar**

| Model | LC2A250Q-E |
|---|---|
| Rated Capacity (metricTon) | 25 |
| Falls of chain | 4 |
| Lifting speed at rated load (m/min) | 0.5 |
| Lifting speed at no load (m/min) | 0.9 |
| Lowering speed at rated load (m/min) | 0.6 |
| Travelling Speed at rated load (m/min) | 12 |
| Travelling Speed at no load (m/min) | 18 |
| Working pressure range (Bar) | 4 to 7 |
| Hoist air consumption at rated load ($m^3$/min) | 5 |
| Trolley motor air consumption ($m^3$/min) | 1.9 |
| Mini-Maxi Trolley flange adjustment (mm) | 140-310 |
| Minimum headroom (mm) | 1240 |
| Minimum curve radius (m) | 5 |
| Air inlet (BSP) | 3/4 |
| Chain size (mm) | 16x45 |
| *Weight with std lift (Kg) | 700 |
| Chain Weight per meter of lift (kg) | 23 |

*Net weight is given with standard lift of 3m and standard control length of 2m*

**Chain container dimensions (mm)**

| Height of lift | A | B | CxD | Option code |
|---|---|---|---|---|
| 3m | 435 | 715 | 315x315 | A |
| 6.5 m | 525 | 915 | 400x400 | B |
| 10 m | 525 | 915 | 550x400 | C |

The equipment described on this sheet is subject to the general sales and warrantly conditions of Ingersoll-Rand company. Because of the constant evolution of technology, Ingersoll-Rand company reserves the right to modify without notice the specifications contained in this document.